Data sheet acquired from Harris Semiconductor
SCHS055E

January 1998 - Revised September 2003

CD4070B, CD4077B

CMOS Quad Exclusive-OR and Exclusive-NOR Gate

Features

- **High-Voltage Types (20V Rating)**
- **CD4070B - Quad Exclusive-OR Gate**
- **CD4077B - Quad Exclusive-NOR Gate**
- **Medium Speed Operation**
  - **t_{PHL}, t_{PLH} = 65ns (Typ) at V_{DD} = 10V, C_L = 50pF**
- **100% Tested for Quiescent Current at 20V**
- **Standardized Symmetrical Output Characteristics**
- **5V, 10V and 15V Parametric Ratings**
- **Maximum Input Current of 1μA at 18V Over Full Package Temperature Range**
  - **100nA at 18V and 25°C**
- **Noise Margin (Over Full Package Temperature Range)**
  - **1V at V_{DD} = 5V, 2V at V_{DD} = 10V, 2.5V at V_{DD} = 15V**
- **Meets All Requirements of JEDEC Standard No. 13B, "Standard Specifications for Description of 'B' Series CMOS Devices**

Applications

- **Logical Comparators**
- **Adders/Subtractors**
- **Parity Generators and Checkers**

Description

The Harris CD4070B contains four independent Exclusive-OR gates. The Harris CD4077B contains four independent Exclusive-NOR gates.

The CD4070B and CD4077B provide the system designer with a means for direct implementation of the Exclusive-OR and Exclusive-NOR functions, respectively.

Ordering Information

PART NUMBER	TEMP. RANGE (^{o}C)	PACKAGE
CD4070BE	-55 to 125	14 Ld PDIP
CD4070BF3A	-55 to 125	14 Ld CERDIP
CD4070BM	-55 to 125	14 Ld SOIC
CD4070BMT	-55 to 125	14 Ld SOIC
CD4070BM96	-55 to 125	14 Ld SOIC
CD4070BNSR	-55 to 125	14 Ld SOP
CD4070BPW	-55 to 125	14 Ld TSSOP
CD4070BPWR	-55 to 125	14 Ld TSSOP
CD4077BE	-55 to 125	14 Ld PDIP
CD4077BF3A	-55 to 125	14 Ld CERDIP
CD4077BM	-55 to 125	14 Ld SOIC
CD4077BMT	-55 to 125	14 Ld SOIC
CD4077BM96	-55 to 125	14 Ld SOIC
CD4077BNSR	-55 to 125	14 Ld SOP
CD4077BPW	-55 to 125	14 Ld TSSOP
CD4077BPWR	-55 to 125	14 Ld TSSOP

NOTE: When ordering, use the entire part number. The suffixes 96 and R denote tape and reel. The suffix T denotes a small-quantity reel of 250.

CAUTION: These devices are sensitive to electrostatic discharge. Users should follow proper IC Handling Procedures.

Copyright © 2003, Texas Instruments Incorporated

Pinouts

CD4070B
(PDIP, CERDIP, SOIC, SOP, TSSOP)
TOP VIEW

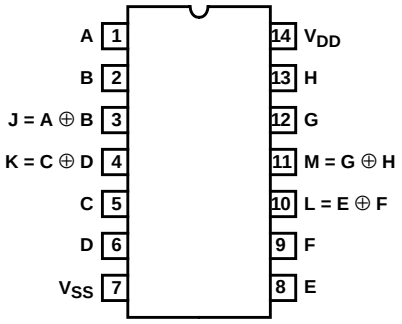

CD4077B
(PDIP, CERDIP, SOIC, SOP, TSSOP)
TOP VIEW

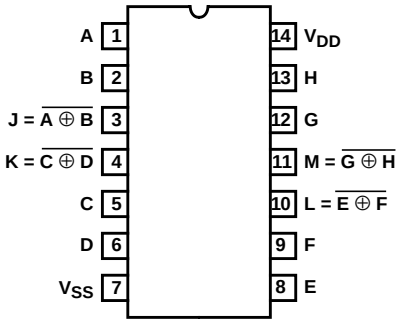

Functional Diagrams

CD4070B

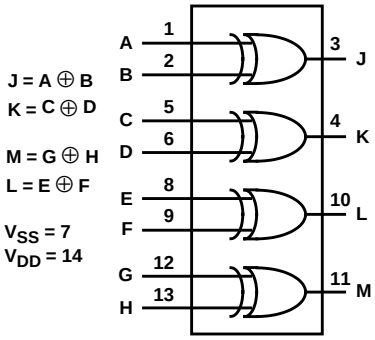

CD4077B

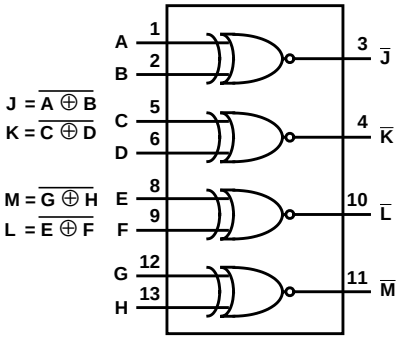

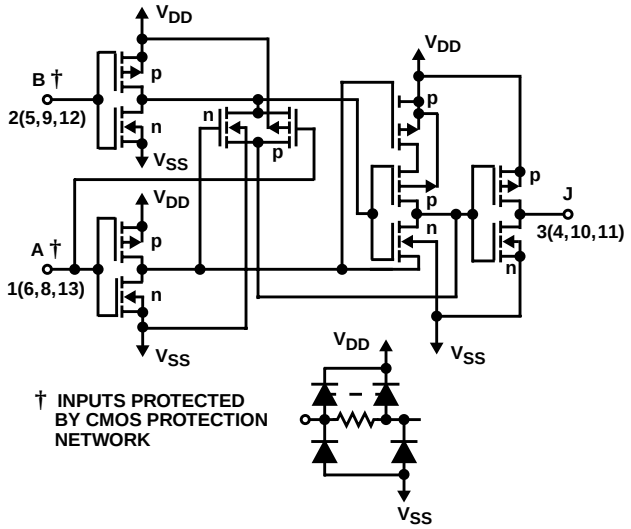

FIGURE 1. SCHEMATIC DIAGRAM FOR CD4070B (1 OF 4 IDENTICAL GATES)

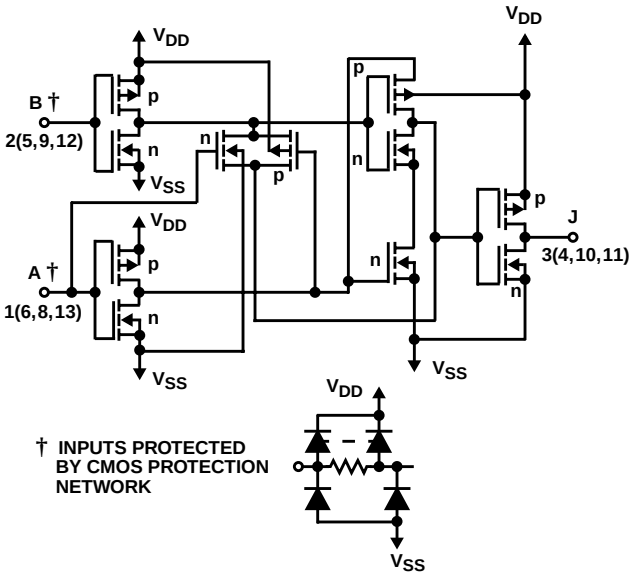

FIGURE 2. SCHEMATIC DIAGRAM FOR CD4077B (1 OF 4 IDENTICAL GATES)

CD4070B TRUTH TABLE (1 OF 4 GATES)

A	B	J
0	0	0
1	0	1
0	1	1
1	1	0

NOTE:
1 = High Level
0 = Low Level
J = A ⊕ B

CD4077B TRUTH TABLE (1 OF 4 GATES)

A	B	J
0	0	1
1	0	0
0	1	0
1	1	1

NOTE:
1 = High Level
0 = Low Level
J = A ⊕ B

Absolute Maximum Ratings

DC Supply Voltage Range (V_{DD}) . . . . . -0.5V to 20V
Input Voltage Range, All Inputs . . . . . -0.5V to V_{DD} 0.5V
DC Input Current . . . . . ± 10mA

Operating Conditions

Temperature Range (T_A) . . . . . -55°C to 125°C
Supply Voltage Range (Typical) . . . . . 3V to 18V

Thermal Information

Package Thermal Impedance, θ_{JA} (see Note 1):
E (PDIP) Package . . . . . 80°C/W
M (SOIC) Package. . . . . 86°C/W
NS (SOP) Package . . . . . 76°C/W
PW (TSSOP) Package . . . . . 113°C/W
Maximum Junction Temperature (Hermetic Package or Die) . 175°C
Maximum Junction Temperature (Plastic Package) . . . . . 150°C
Maximum Storage Temperature Range . . . . . -65°C to 150°C

CAUTION: Stresses above those listed in "Absolute Maximum Ratings" may cause permanent damage to the device. This is a stress only rating and operation of the device at these or any other conditions above those indicated in the operational sections of this specification is not implied.

NOTE:

1. The package thermal impedance is calculated in accordance with JESD 51-7.

DC Electrical Specifications

PARAMETER	CONDITIONS			LIMITS AT INDICATED TEMPERATURES (°C)							UNITS
								25			
	V_O (V)	V_{IN} (V)	V_{DD} (V)	-55	-40	85	125	MIN	TYP	MAX	
Quiescent Device Current I_{DD} Max	-	0, 5	5	0.25	0.25	7.5	7.5	-	0.01	0.25	µA
	-	0, 10	10	0.5	0.5	15	15	-	0.01	0.5	µA
	-	0, 15	15	1	1	30	30	-	0.01	1	µA
	-	0, 20	20	5	5	150	150	-	0.02	5	µA
Output Low (Sink) Current I_{OL} Min	0.4	0, 5	5	0.64	0.61	0.42	0.36	0.51	1	-	mA
	0.5	0, 10	10	1.6	1.5	1.1	0.9	1.3	2.6	-	mA
	1.5	0, 15	15	4.2	4	2.8	2.4	3.4	6.8	-	mA
Output High (Source) Current I_{OH} Min	4.6	0, 5	5	-0.64	-0.61	-0.42	-0.36	-0.51	-1	-	mA
	2.5	0, 5	5	-2	-1.8	-1.3	-1.15	-1.6	-3.2	-	mA
	9.5	0, 10	10	-1.6	-1.5	-1.1	-0.9	-1.3	-2.6	-	mA
	13.5	0, 15	15	-4.2	-4	-2.8	-2.4	-3.4	-6.8	-	mA
Output Voltage: Low Level, V_{OL} Max	-	0, 5	5	0.05	0.05	0.05	0.05	-	0	0.05	V
	-	0, 10	10	0.05	0.05	0.05	0.05	-	0	0.05	V
	-	0, 15	15	0.05	0.05	0.05	0.05	-	0	0.05	V
Output Voltage: High Level, V_{OH} Min	-	0, 5	5	4.95	4.95	4.95	4.95	4.95	5	-	V
	-	0, 10	10	9.95	9.95	9.95	9.95	9.95	10	-	V
	-	0, 15	15	14.95	14.95	14.95	14.95	14.95	15	-	V
Input Low Voltage, V_{IL} Max	0.5, 4.5	-	5	1.5	1.5	1.5	1.5	-	-	1.5	V
	1, 9	-	10	3	3	3	3	-	-	3	V
	1.5, 13.5	-	15	4	4	4	4	-	-	4	V
Input High Voltage, V_{IH} Min	0.5, 4.5	-	5	3.5	3.5	3.5	3.5	3.5	-	-	V
	1, 9	-	10	7	7	7	7	7	-	-	V
	1.5, 13.5	-	15	11	11	11	11	11	-	-	V
Input Current, I_{IN} Max	-	0, 18	18	±0.1	±0.1	±1	±1	-	$\pm10^{-5}$	±0.1	µA

AC Electrical Specifications

$T_A = 25^oC$, Input t_r, t_f = 20ns, C_L = 50pF, R_L = 200kΩ

PARAMETER	SYMBOL	TEST CONDITIONS	LIMITS ON ALL TYPES		UNITS
		V_{DD} (V)	TYP	MAX	
Propagation Delay Time	t_{PHL}, t_{PLH}	5	140	280	ns
		10	65	130	ns
		15	50	100	ns
Transition Time	t_{THL}, t_{TLH}	5	100	200	ns
		10	50	100	ns
		15	40	80	ns
Input Capacitance	C_{IN}	Any Input	5	7.5	pF

Typical Performance Curves

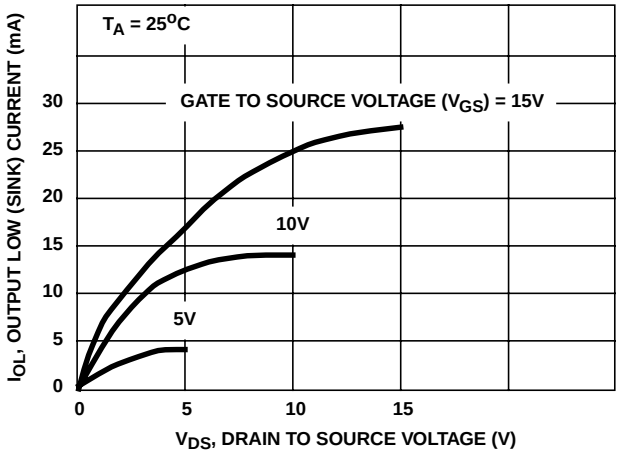

FIGURE 3. TYPICAL OUTPUT LOW (SINK) CURRENT CHARACTERISTICS

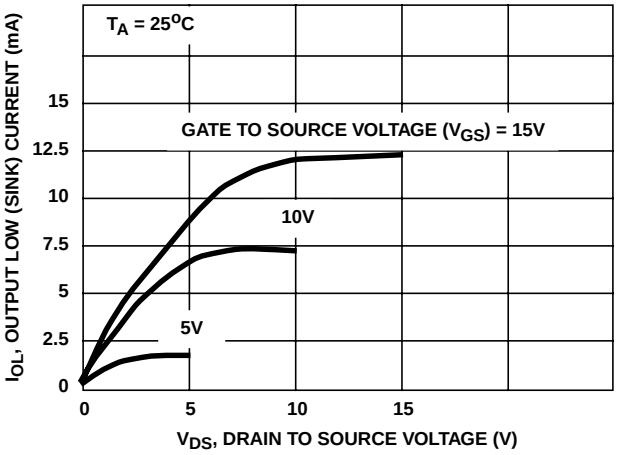

FIGURE 4. MINIMUM OUTPUT LOW (SINK) CURRENT CHARACTERISTICS

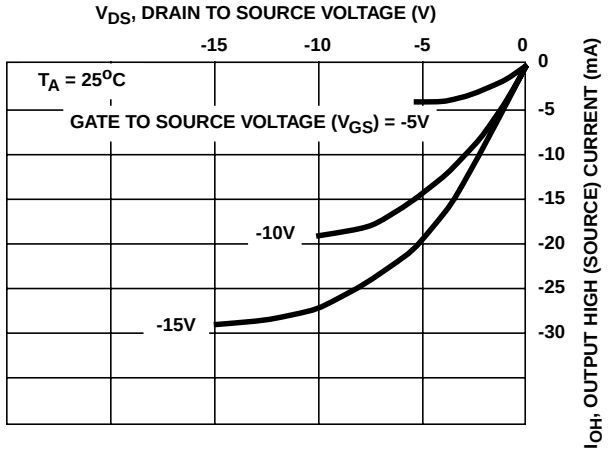

FIGURE 5. TYPICAL OUTPUT HIGH (SOURCE) CURRENT CHARACTERISTICS

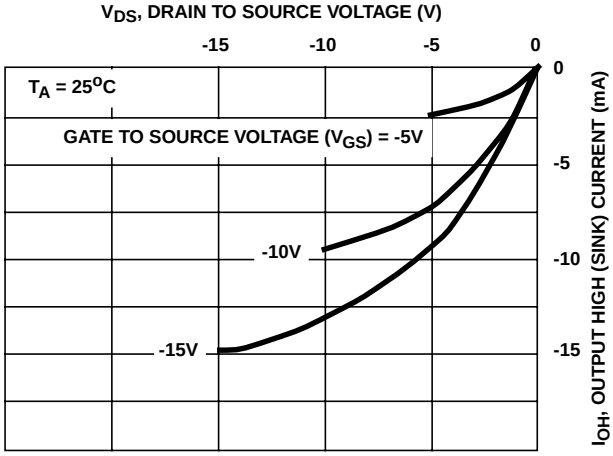

FIGURE 6. MINIMUM OUTPUT HIGH (SOURCE) CURRENT CHARACTERISTICS

Typical Performance Curves (Continued)

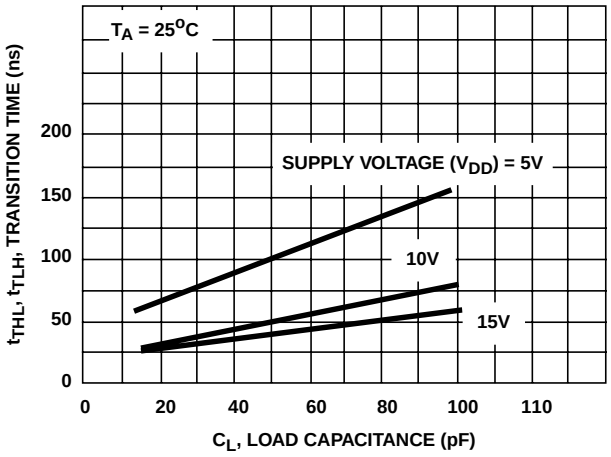

FIGURE 7. TYPICAL TRANSITION TIME AS A FUNCTION OF LOAD CAPACITANCE

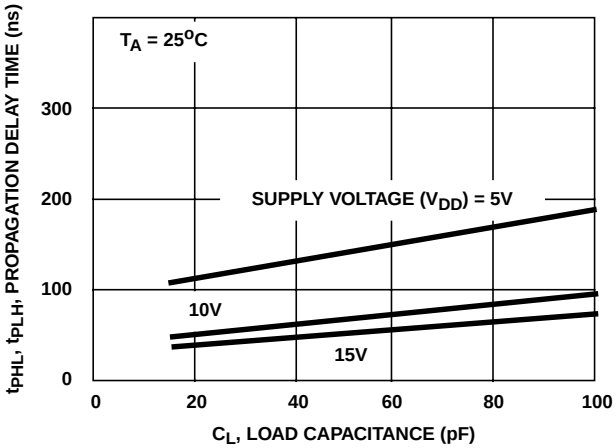

FIGURE 8. TYPICAL PROPAGATION DELAY TIME AS A FUNCTION OF LOAD CAPACITANCE

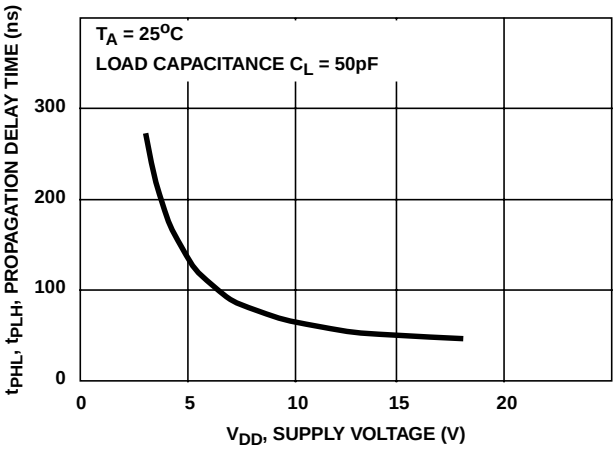

FIGURE 9. TYPICAL PROPAGATION DELAY TIME AS A FUNCTION OF SUPPLY VOLTAGE

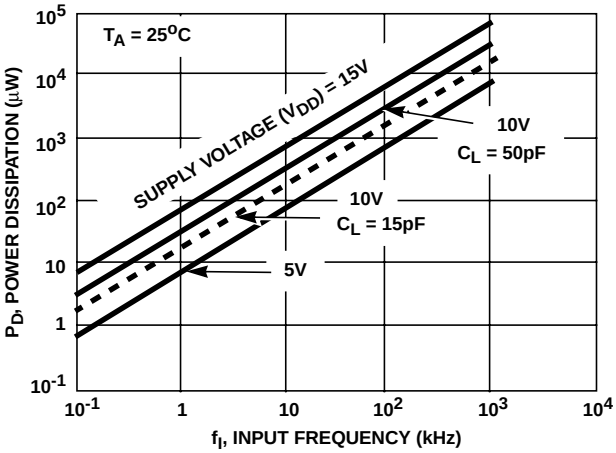

FIGURE 10. TYPICAL DYNAMIC POWER DISSIPATION AS A FUNCTION OF INPUT FREQUENCY

PACKAGING INFORMATION

Orderable Device	Status (1)	Package Type	Package Drawing	Pins	Package Qty	Eco Plan (2)	Lead/Ball Finish	MSL Peak Temp (3)
CD4070BE	ACTIVE	PDIP	N	14	25	Pb-Free (RoHS)	CU NIPDAU	N / A for Pkg Type
CD4070BEE4	ACTIVE	PDIP	N	14	25	Pb-Free (RoHS)	CU NIPDAU	N / A for Pkg Type
CD4070BF	ACTIVE	CDIP	J	14	1	TBD	A42	N / A for Pkg Type
CD4070BF3A	ACTIVE	CDIP	J	14	1	TBD	A42	N / A for Pkg Type
CD4070BF3AS2534	OBSOLETE	CDIP	J	14		TBD	Call TI	Call TI
CD4070BM	ACTIVE	SOIC	D	14	50	Green (RoHS & no Sb/Br)	CU NIPDAU	Level-1-260C-UNLIM
CD4070BM96	ACTIVE	SOIC	D	14	2500	Green (RoHS & no Sb/Br)	CU NIPDAU	Level-1-260C-UNLIM
CD4070BM96E4	ACTIVE	SOIC	D	14	2500	Green (RoHS & no Sb/Br)	CU NIPDAU	Level-1-260C-UNLIM
CD4070BM96G4	ACTIVE	SOIC	D	14	2500	Green (RoHS & no Sb/Br)	CU NIPDAU	Level-1-260C-UNLIM
CD4070BME4	ACTIVE	SOIC	D	14	50	Green (RoHS & no Sb/Br)	CU NIPDAU	Level-1-260C-UNLIM
CD4070BMG4	ACTIVE	SOIC	D	14	50	Green (RoHS & no Sb/Br)	CU NIPDAU	Level-1-260C-UNLIM
CD4070BMT	ACTIVE	SOIC	D	14	250	Green (RoHS & no Sb/Br)	CU NIPDAU	Level-1-260C-UNLIM
CD4070BMTE4	ACTIVE	SOIC	D	14	250	Green (RoHS & no Sb/Br)	CU NIPDAU	Level-1-260C-UNLIM
CD4070BMTG4	ACTIVE	SOIC	D	14	250	Green (RoHS & no Sb/Br)	CU NIPDAU	Level-1-260C-UNLIM
CD4070BNSR	ACTIVE	SO	NS	14	2000	Green (RoHS & no Sb/Br)	CU NIPDAU	Level-1-260C-UNLIM
CD4070BNSRE4	ACTIVE	SO	NS	14	2000	Green (RoHS & no Sb/Br)	CU NIPDAU	Level-1-260C-UNLIM
CD4070BNSRG4	ACTIVE	SO	NS	14	2000	Green (RoHS & no Sb/Br)	CU NIPDAU	Level-1-260C-UNLIM
CD4070BPW	ACTIVE	TSSOP	PW	14	90	Green (RoHS & no Sb/Br)	CU NIPDAU	Level-1-260C-UNLIM
CD4070BPWE4	ACTIVE	TSSOP	PW	14	90	Green (RoHS & no Sb/Br)	CU NIPDAU	Level-1-260C-UNLIM
CD4070BPWG4	ACTIVE	TSSOP	PW	14	90	Green (RoHS & no Sb/Br)	CU NIPDAU	Level-1-260C-UNLIM
CD4070BPWR	ACTIVE	TSSOP	PW	14	2000	Green (RoHS & no Sb/Br)	CU NIPDAU	Level-1-260C-UNLIM
CD4070BPWRE4	ACTIVE	TSSOP	PW	14	2000	Green (RoHS & no Sb/Br)	CU NIPDAU	Level-1-260C-UNLIM
CD4070BPWRG4	ACTIVE	TSSOP	PW	14	2000	Green (RoHS & no Sb/Br)	CU NIPDAU	Level-1-260C-UNLIM
CD4077BE	ACTIVE	PDIP	N	14	25	Pb-Free (RoHS)	CU NIPDAU	N / A for Pkg Type
CD4077BEE4	ACTIVE	PDIP	N	14	25	Pb-Free (RoHS)	CU NIPDAU	N / A for Pkg Type
CD4077BF	ACTIVE	CDIP	J	14	1	TBD	A42	N / A for Pkg Type
CD4077BF3A	ACTIVE	CDIP	J	14	1	TBD	A42	N / A for Pkg Type

Orderable Device	Status [1]	Package Type	Package Drawing	Pins	Package Qty	Eco Plan [2]	Lead/Ball Finish	MSL Peak Temp [3]
CD4077BM	ACTIVE	SOIC	D	14	50	Green (RoHS & no Sb/Br)	CU NIPDAU	Level-1-260C-UNLIM
CD4077BM96	ACTIVE	SOIC	D	14	2500	Green (RoHS & no Sb/Br)	CU NIPDAU	Level-1-260C-UNLIM
CD4077BM96E4	ACTIVE	SOIC	D	14	2500	Green (RoHS & no Sb/Br)	CU NIPDAU	Level-1-260C-UNLIM
CD4077BM96G4	ACTIVE	SOIC	D	14	2500	Green (RoHS & no Sb/Br)	CU NIPDAU	Level-1-260C-UNLIM
CD4077BME4	ACTIVE	SOIC	D	14	50	Green (RoHS & no Sb/Br)	CU NIPDAU	Level-1-260C-UNLIM
CD4077BMG4	ACTIVE	SOIC	D	14	50	Green (RoHS & no Sb/Br)	CU NIPDAU	Level-1-260C-UNLIM
CD4077BMT	ACTIVE	SOIC	D	14	250	Green (RoHS & no Sb/Br)	CU NIPDAU	Level-1-260C-UNLIM
CD4077BMTE4	ACTIVE	SOIC	D	14	250	Green (RoHS & no Sb/Br)	CU NIPDAU	Level-1-260C-UNLIM
CD4077BMTG4	ACTIVE	SOIC	D	14	250	Green (RoHS & no Sb/Br)	CU NIPDAU	Level-1-260C-UNLIM
CD4077BNSR	ACTIVE	SO	NS	14	2000	Green (RoHS & no Sb/Br)	CU NIPDAU	Level-1-260C-UNLIM
CD4077BNSRE4	ACTIVE	SO	NS	14	2000	Green (RoHS & no Sb/Br)	CU NIPDAU	Level-1-260C-UNLIM
CD4077BNSRG4	ACTIVE	SO	NS	14	2000	Green (RoHS & no Sb/Br)	CU NIPDAU	Level-1-260C-UNLIM
CD4077BPW	ACTIVE	TSSOP	PW	14	90	Green (RoHS & no Sb/Br)	CU NIPDAU	Level-1-260C-UNLIM
CD4077BPWE4	ACTIVE	TSSOP	PW	14	90	Green (RoHS & no Sb/Br)	CU NIPDAU	Level-1-260C-UNLIM
CD4077BPWG4	ACTIVE	TSSOP	PW	14	90	Green (RoHS & no Sb/Br)	CU NIPDAU	Level-1-260C-UNLIM
CD4077BPWR	ACTIVE	TSSOP	PW	14	2000	Green (RoHS & no Sb/Br)	CU NIPDAU	Level-1-260C-UNLIM
CD4077BPWRE4	ACTIVE	TSSOP	PW	14	2000	Green (RoHS & no Sb/Br)	CU NIPDAU	Level-1-260C-UNLIM
CD4077BPWRG4	ACTIVE	TSSOP	PW	14	2000	Green (RoHS & no Sb/Br)	CU NIPDAU	Level-1-260C-UNLIM
JM38510/17203BCA	ACTIVE	CDIP	J	14	1	TBD	A42	N / A for Pkg Type

[1] The marketing status values are defined as follows:
ACTIVE: Product device recommended for new designs.
LIFEBUY: TI has announced that the device will be discontinued, and a lifetime-buy period is in effect.
NRND: Not recommended for new designs. Device is in production to support existing customers, but TI does not recommend using this part in a new design.
PREVIEW: Device has been announced but is not in production. Samples may or may not be available.
OBSOLETE: TI has discontinued the production of the device.

[2] Eco Plan - The planned eco-friendly classification: Pb-Free (RoHS), Pb-Free (RoHS Exempt), or Green (RoHS & no Sb/Br) - please check http://www.ti.com/productcontent for the latest availability information and additional product content details.
TBD: The Pb-Free/Green conversion plan has not been defined.
Pb-Free (RoHS): TI's terms "Lead-Free" or "Pb-Free" mean semiconductor products that are compatible with the current RoHS requirements for all 6 substances, including the requirement that lead not exceed 0.1% by weight in homogeneous materials. Where designed to be soldered at high temperatures, TI Pb-Free products are suitable for use in specified lead-free processes.
Pb-Free (RoHS Exempt): This component has a RoHS exemption for either 1) lead-based flip-chip solder bumps used between the die and package, or 2) lead-based die adhesive used between the die and leadframe. The component is otherwise considered Pb-Free (RoHS

compatible) as defined above.
Green (RoHS & no Sb/Br): TI defines "Green" to mean Pb-Free (RoHS compatible), and free of Bromine (Br) and Antimony (Sb) based flame retardants (Br or Sb do not exceed 0.1% by weight in homogeneous material)

(3) MSL, Peak Temp. -- The Moisture Sensitivity Level rating according to the JEDEC industry standard classifications, and peak solder temperature.

Important Information and Disclaimer: The information provided on this page represents TI's knowledge and belief as of the date that it is provided. TI bases its knowledge and belief on information provided by third parties, and makes no representation or warranty as to the accuracy of such information. Efforts are underway to better integrate information from third parties. TI has taken and continues to take reasonable steps to provide representative and accurate information but may not have conducted destructive testing or chemical analysis on incoming materials and chemicals. TI and TI suppliers consider certain information to be proprietary, and thus CAS numbers and other limited information may not be available for release.

In no event shall TI's liability arising out of such information exceed the total purchase price of the TI part(s) at issue in this document sold by TI to Customer on an annual basis.

TAPE AND REEL INFORMATION

REEL DIMENSIONS

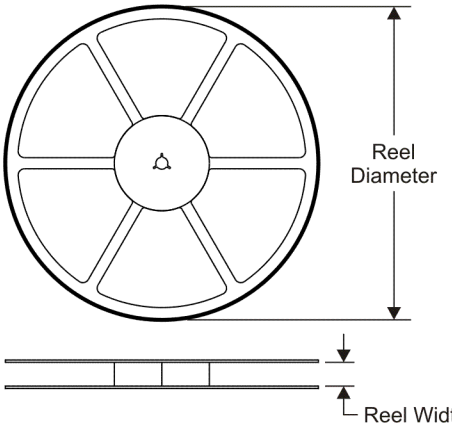

TAPE DIMENSIONS

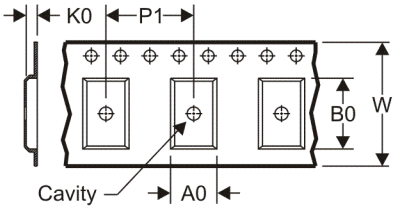

A0	Dimension designed to accommodate the component width
B0	Dimension designed to accommodate the component length
K0	Dimension designed to accommodate the component thickness
W	Overall width of the carrier tape
P1	Pitch between successive cavity centers

QUADRANT ASSIGNMENTS FOR PIN 1 ORIENTATION IN TAPE

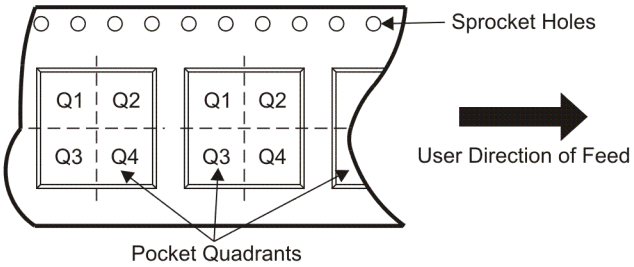

*All dimensions are nominal

Device	Package Type	Package Drawing	Pins	SPQ	Reel Diameter (mm)	Reel Width W1 (mm)	A0 (mm)	B0 (mm)	K0 (mm)	P1 (mm)	W (mm)	Pin1 Quadrant
CD4070BM96	SOIC	D	14	2500	330.0	16.4	6.5	9.0	2.1	8.0	16.0	Q1
CD4070BNSR	SO	NS	14	2000	330.0	16.4	8.2	10.5	2.5	12.0	16.0	Q1
CD4070BPWR	TSSOP	PW	14	2000	330.0	12.4	7.0	5.6	1.6	8.0	12.0	Q1
CD4077BM96	SOIC	D	14	2500	330.0	16.4	6.5	9.0	2.1	8.0	16.0	Q1
CD4077BNSR	SO	NS	14	2000	330.0	16.4	8.2	10.5	2.5	12.0	16.0	Q1
CD4077BPWR	TSSOP	PW	14	2000	330.0	12.4	7.0	5.6	1.6	8.0	12.0	Q1

TAPE AND REEL BOX DIMENSIONS

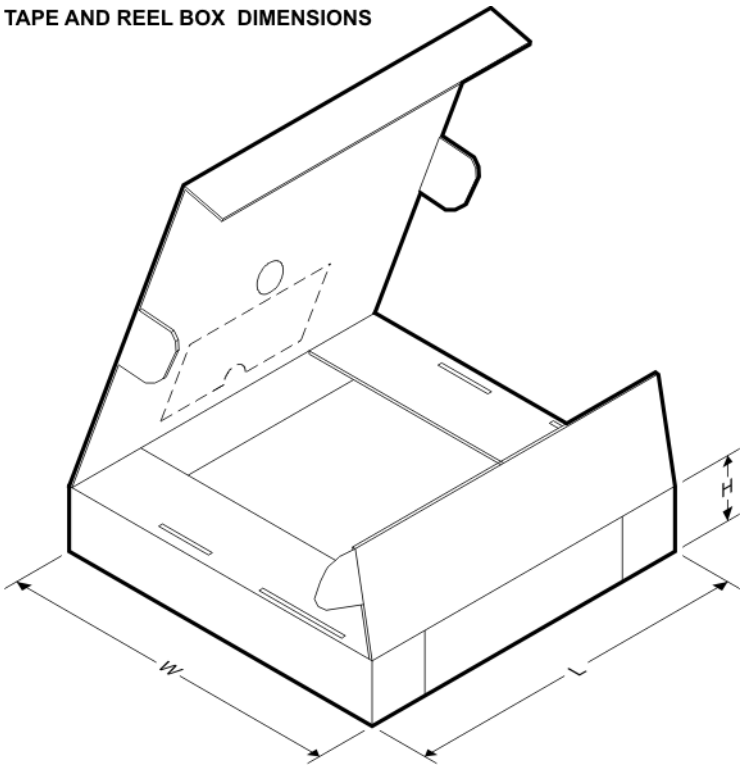

*All dimensions are nominal

Device	Package Type	Package Drawing	Pins	SPQ	Length (mm)	Width (mm)	Height (mm)
CD4070BM96	SOIC	D	14	2500	346.0	346.0	33.0
CD4070BNSR	SO	NS	14	2000	346.0	346.0	33.0
CD4070BPWR	TSSOP	PW	14	2000	346.0	346.0	29.0
CD4077BM96	SOIC	D	14	2500	346.0	346.0	33.0
CD4077BNSR	SO	NS	14	2000	346.0	346.0	33.0
CD4077BPWR	TSSOP	PW	14	2000	346.0	346.0	29.0

J (R–GDIP–T**) CERAMIC DUAL IN–LINE PACKAGE

14 LEADS SHOWN

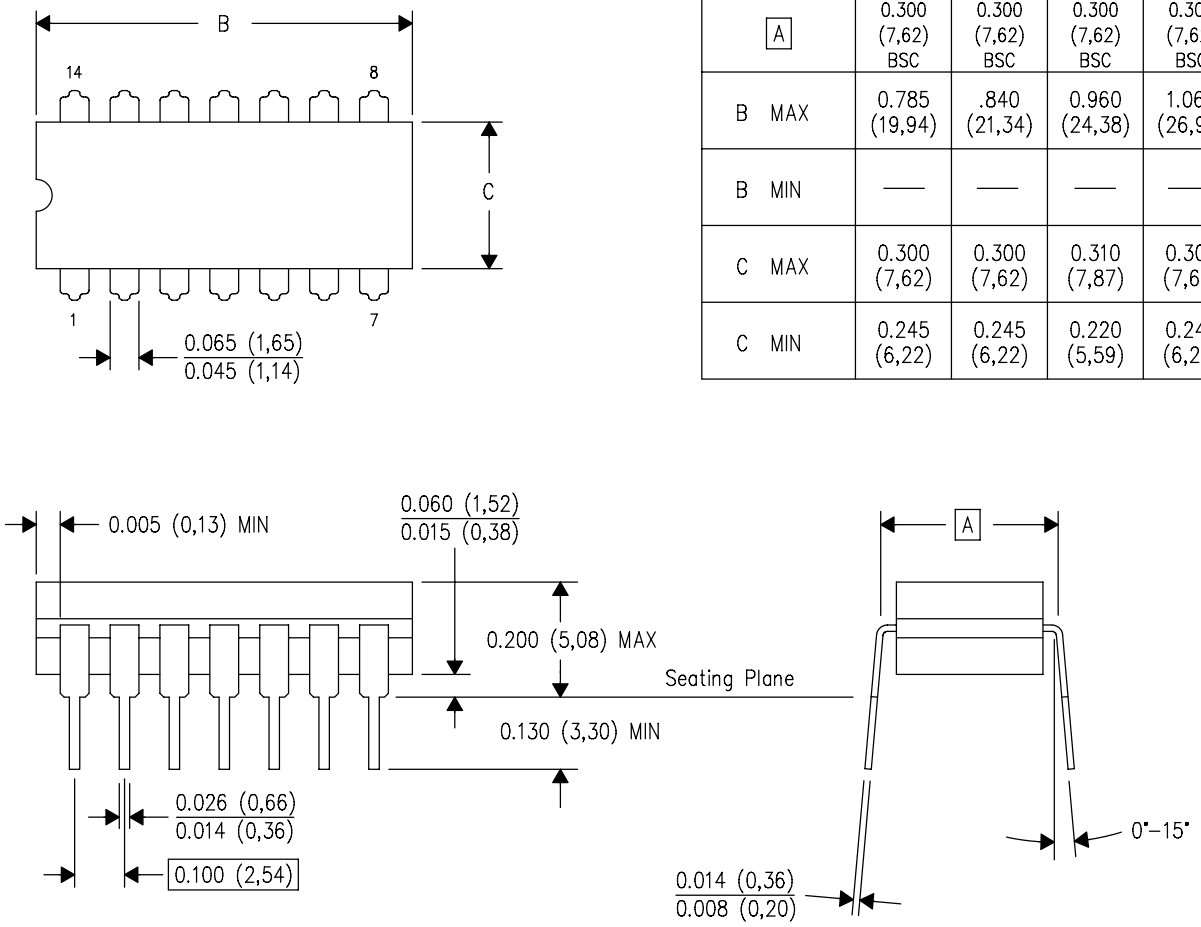

DIM \ PINS **	14	16	18	20
A	0.300 (7,62) BSC	0.300 (7,62) BSC	0.300 (7,62) BSC	0.300 (7,62) BSC
B MAX	0.785 (19,94)	.840 (21,34)	0.960 (24,38)	1.060 (26,92)
B MIN	—	—	—	—
C MAX	0.300 (7,62)	0.300 (7,62)	0.310 (7,87)	0.300 (7,62)
C MIN	0.245 (6,22)	0.245 (6,22)	0.220 (5,59)	0.245 (6,22)

4040083/F 03/03

NOTES:
- A. All linear dimensions are in inches (millimeters).
- B. This drawing is subject to change without notice.
- C. This package is hermetically sealed with a ceramic lid using glass frit.
- D. Index point is provided on cap for terminal identification only on press ceramic glass frit seal only.
- E. Falls within MIL STD 1835 GDIP1–T14, GDIP1–T16, GDIP1–T18 and GDIP1–T20.

MECHANICAL DATA

NS (R-PDSO-G)** **PLASTIC SMALL-OUTLINE PACKAGE**

14-PINS SHOWN

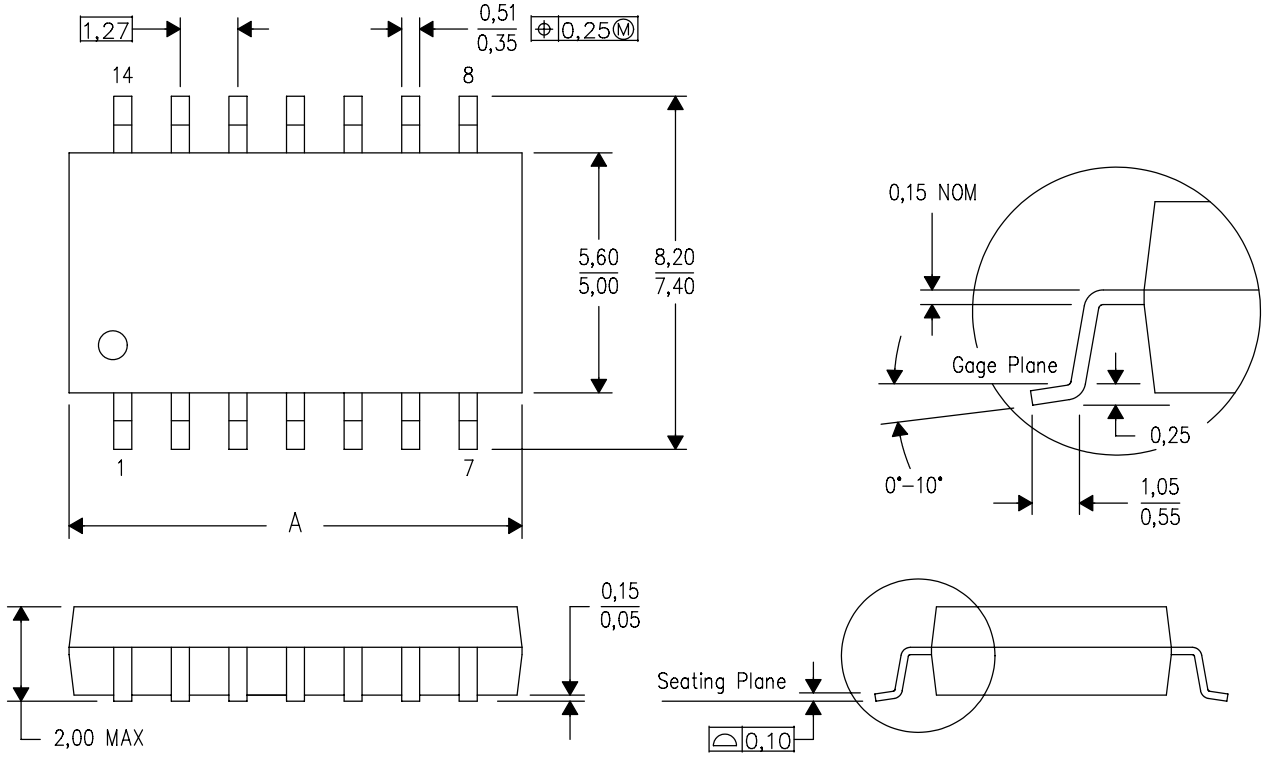

DIM \ PINS **	14	16	20	24
A MAX	10,50	10,50	12,90	15,30
A MIN	9,90	9,90	12,30	14,70

4040062/C 03/03

NOTES:
A. All linear dimensions are in millimeters.
B. This drawing is subject to change without notice.
C. Body dimensions do not include mold flash or protrusion, not to exceed 0,15.

PW (R-PDSO-G)** **PLASTIC SMALL-OUTLINE PACKAGE**

14 PINS SHOWN

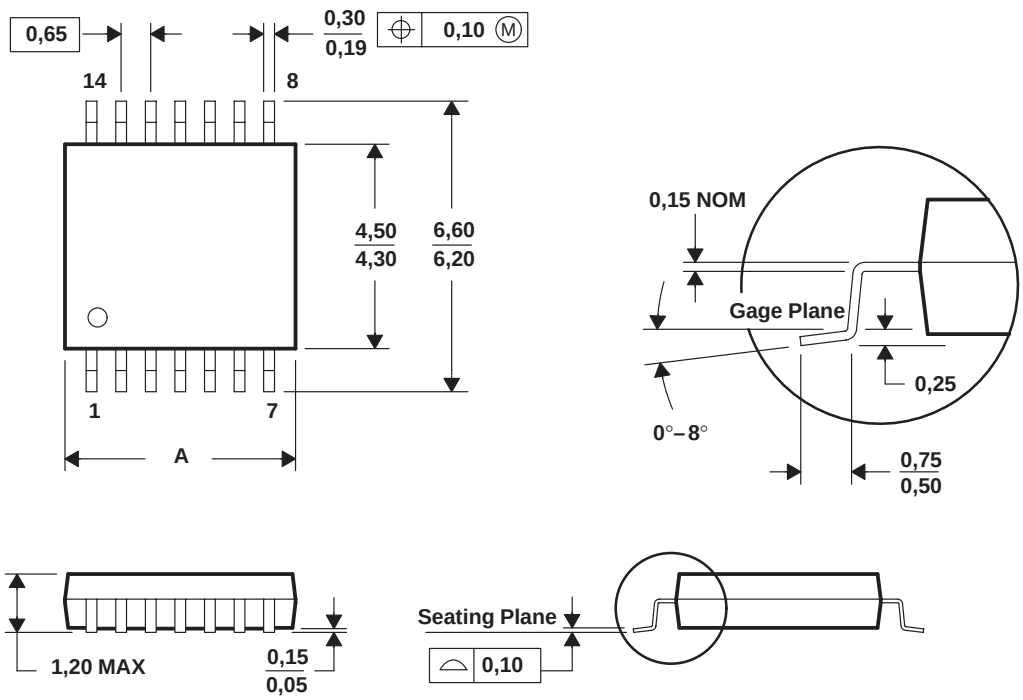

DIM \ PINS **	8	14	16	20	24	28
A MAX	3,10	5,10	5,10	6,60	7,90	9,80
A MIN	2,90	4,90	4,90	6,40	7,70	9,60

4040064/F 01/97

NOTES: A. All linear dimensions are in millimeters.
B. This drawing is subject to change without notice.
C. Body dimensions do not include mold flash or protrusion not to exceed 0,15.
D. Falls within JEDEC MO-153

D (R–PDSO–G14) PLASTIC SMALL–OUTLINE PACKAGE

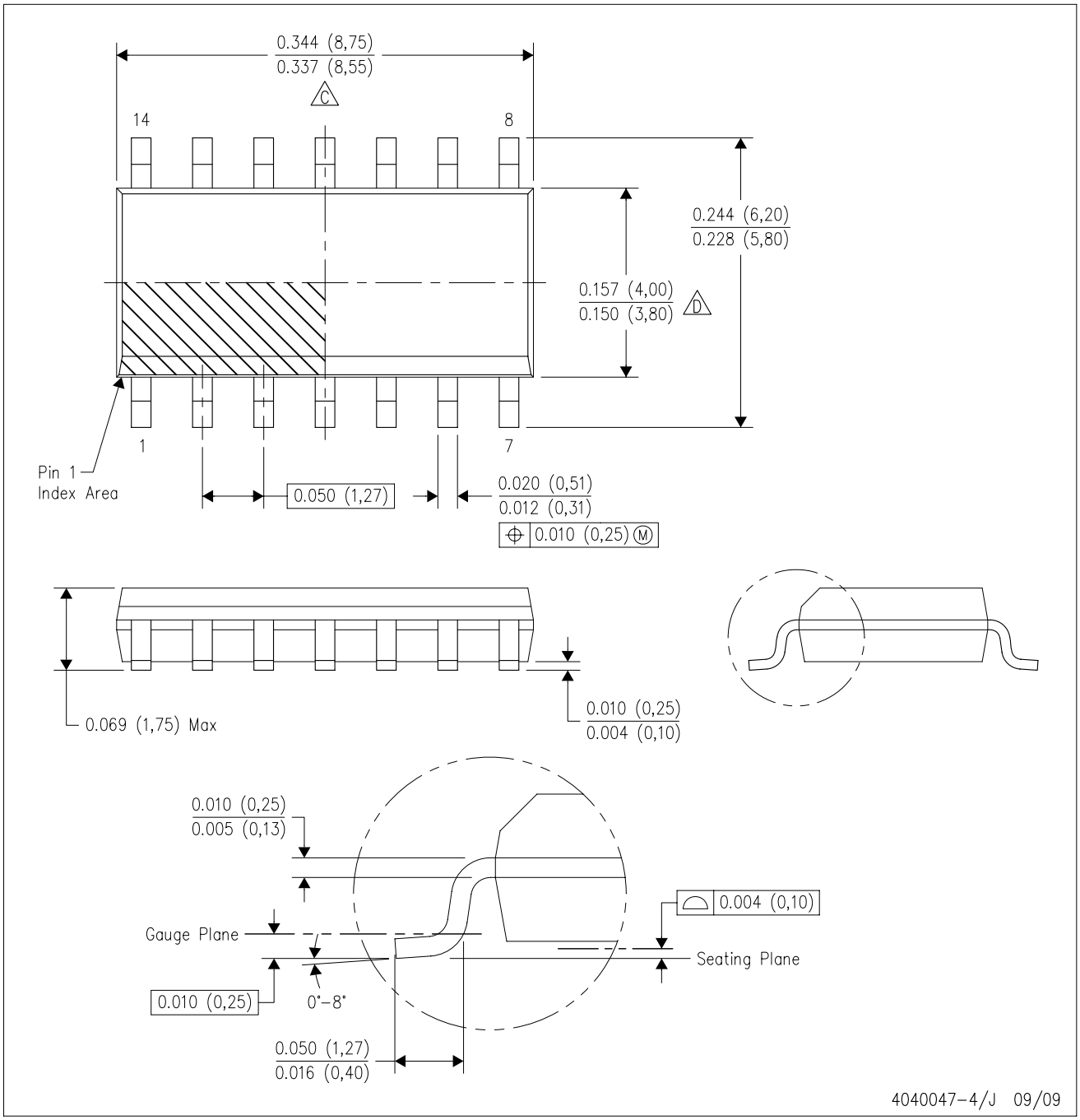

NOTES:
A. All linear dimensions are in inches (millimeters).
B. This drawing is subject to change without notice.
C. Body length does not include mold flash, protrusions, or gate burrs. Mold flash, protrusions, or gate burrs shall not exceed .006 (0,15) per end.
D. Body width does not include interlead flash. Interlead flash shall not exceed .017 (0,43) per side.
E. Reference JEDEC MS–012 variation AB.

N (R–PDIP–T**) PLASTIC DUAL–IN–LINE PACKAGE

16 PINS SHOWN

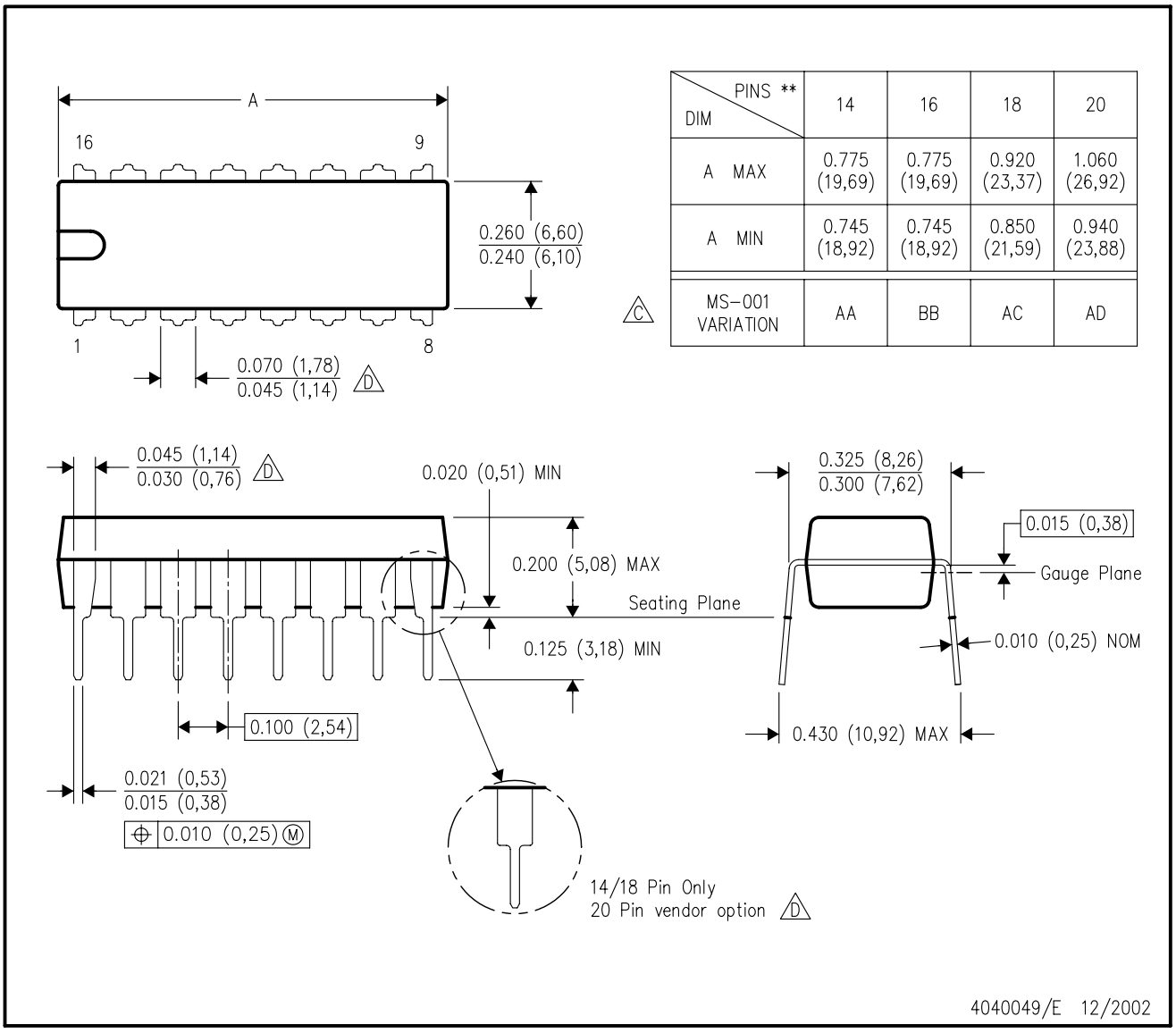

DIM \ PINS **	14	16	18	20
A MAX	0.775 (19,69)	0.775 (19,69)	0.920 (23,37)	1.060 (26,92)
A MIN	0.745 (18,92)	0.745 (18,92)	0.850 (21,59)	0.940 (23,88)
MS–001 VARIATION (C)	AA	BB	AC	AD

NOTES:
A. All linear dimensions are in inches (millimeters).
B. This drawing is subject to change without notice.
C. Falls within JEDEC MS–001, except 18 and 20 pin minimum body length (Dim A).
D. The 20 pin end lead shoulder width is a vendor option, either half or full width.

PACKAGING INFORMATION

Orderable Device	Status (1)	Package Type	Package Drawing	Pins	Package Qty	Eco Plan (2)	Lead/Ball Finish (6)	MSL Peak Temp (3)	Op Temp (°C)	Device Marking (4/5)	Samples
CD4070BE	ACTIVE	PDIP	N	14	25	Pb-Free (RoHS)	CU NIPDAU	N / A for Pkg Type	-55 to 125	CD4070BE	Samples
CD4070BEE4	ACTIVE	PDIP	N	14	25	Pb-Free (RoHS)	CU NIPDAU	N / A for Pkg Type	-55 to 125	CD4070BE	Samples
CD4070BF	ACTIVE	CDIP	J	14	1	TBD	A42	N / A for Pkg Type	-55 to 125	CD4070BF	Samples
CD4070BF3A	ACTIVE	CDIP	J	14	1	TBD	A42	N / A for Pkg Type	-55 to 125	CD4070BF3A	Samples
CD4070BM	ACTIVE	SOIC	D	14	50	Green (RoHS & no Sb/Br)	CU NIPDAU	Level-1-260C-UNLIM	-55 to 125	CD4070BM	Samples
CD4070BM96	ACTIVE	SOIC	D	14	2500	Green (RoHS & no Sb/Br)	CU NIPDAU	Level-1-260C-UNLIM	-55 to 125	CD4070BM	Samples
CD4070BM96E4	ACTIVE	SOIC	D	14	2500	Green (RoHS & no Sb/Br)	CU NIPDAU	Level-1-260C-UNLIM	-55 to 125	CD4070BM	Samples
CD4070BM96G4	ACTIVE	SOIC	D	14	2500	Green (RoHS & no Sb/Br)	CU NIPDAU	Level-1-260C-UNLIM	-55 to 125	CD4070BM	Samples
CD4070BMG4	ACTIVE	SOIC	D	14	50	Green (RoHS & no Sb/Br)	CU NIPDAU	Level-1-260C-UNLIM	-55 to 125	CD4070BM	Samples
CD4070BMT	ACTIVE	SOIC	D	14	250	Green (RoHS & no Sb/Br)	CU NIPDAU	Level-1-260C-UNLIM	-55 to 125	CD4070BM	Samples
CD4070BNSR	ACTIVE	SO	NS	14	2000	Green (RoHS & no Sb/Br)	CU NIPDAU	Level-1-260C-UNLIM	-55 to 125	CD4070B	Samples
CD4070BNSRG4	ACTIVE	SO	NS	14	2000	Green (RoHS & no Sb/Br)	CU NIPDAU	Level-1-260C-UNLIM	-55 to 125	CD4070B	Samples
CD4070BPW	ACTIVE	TSSOP	PW	14	90	Green (RoHS & no Sb/Br)	CU NIPDAU	Level-1-260C-UNLIM	-55 to 125	CM070B	Samples
CD4070BPWR	ACTIVE	TSSOP	PW	14	2000	Green (RoHS & no Sb/Br)	CU NIPDAU	Level-1-260C-UNLIM	-55 to 125	CM070B	Samples
CD4077BE	ACTIVE	PDIP	N	14	25	Pb-Free (RoHS)	CU NIPDAU	N / A for Pkg Type	-55 to 125	CD4077BE	Samples
CD4077BEE4	ACTIVE	PDIP	N	14	25	Pb-Free (RoHS)	CU NIPDAU	N / A for Pkg Type	-55 to 125	CD4077BE	Samples
CD4077BF	ACTIVE	CDIP	J	14	1	TBD	A42	N / A for Pkg Type	-55 to 125	CD4077BF	Samples
CD4077BF3A	ACTIVE	CDIP	J	14	1	TBD	A42	N / A for Pkg Type	-55 to 125	CD4077BF3A	Samples

Orderable Device	Status (1)	Package Type	Package Drawing	Pins	Package Qty	Eco Plan (2)	Lead/Ball Finish (6)	MSL Peak Temp (3)	Op Temp (°C)	Device Marking (4/5)	Samples
CD4077BM	ACTIVE	SOIC	D	14	50	Green (RoHS & no Sb/Br)	CU NIPDAU	Level-1-260C-UNLIM	-55 to 125	CD4077BM	Samples
CD4077BM96	ACTIVE	SOIC	D	14	2500	Green (RoHS & no Sb/Br)	CU NIPDAU	Level-1-260C-UNLIM	-55 to 125	CD4077BM	Samples
CD4077BM96E4	ACTIVE	SOIC	D	14	2500	Green (RoHS & no Sb/Br)	CU NIPDAU	Level-1-260C-UNLIM	-55 to 125	CD4077BM	Samples
CD4077BM96G4	ACTIVE	SOIC	D	14	2500	Green (RoHS & no Sb/Br)	CU NIPDAU	Level-1-260C-UNLIM	-55 to 125	CD4077BM	Samples
CD4077BME4	ACTIVE	SOIC	D	14	50	Green (RoHS & no Sb/Br)	CU NIPDAU	Level-1-260C-UNLIM	-55 to 125	CD4077BM	Samples
CD4077BMT	ACTIVE	SOIC	D	14	250	Green (RoHS & no Sb/Br)	CU NIPDAU	Level-1-260C-UNLIM	-55 to 125	CD4077BM	Samples
CD4077BNSR	ACTIVE	SO	NS	14	2000	Green (RoHS & no Sb/Br)	CU NIPDAU	Level-1-260C-UNLIM	-55 to 125	CD4077B	Samples
CD4077BNSRG4	ACTIVE	SO	NS	14	2000	Green (RoHS & no Sb/Br)	CU NIPDAU	Level-1-260C-UNLIM	-55 to 125	CD4077B	Samples
CD4077BPW	ACTIVE	TSSOP	PW	14	90	Green (RoHS & no Sb/Br)	CU NIPDAU	Level-1-260C-UNLIM	-55 to 125	CM077B	Samples
JM38510/17203BCA	ACTIVE	CDIP	J	14	1	TBD	A42	N / A for Pkg Type	-55 to 125	JM38510/ 17203BCA	Samples
M38510/17203BCA	ACTIVE	CDIP	J	14	1	TBD	A42	N / A for Pkg Type	-55 to 125	JM38510/ 17203BCA	Samples

(1) The marketing status values are defined as follows:
ACTIVE: Product device recommended for new designs.
LIFEBUY: TI has announced that the device will be discontinued, and a lifetime-buy period is in effect.
NRND: Not recommended for new designs. Device is in production to support existing customers, but TI does not recommend using this part in a new design.
PREVIEW: Device has been announced but is not in production. Samples may or may not be available.
OBSOLETE: TI has discontinued the production of the device.

(2) Eco Plan - The planned eco-friendly classification: Pb-Free (RoHS), Pb-Free (RoHS Exempt), or Green (RoHS & no Sb/Br) - please check http://www.ti.com/productcontent for the latest availability information and additional product content details.
TBD: The Pb-Free/Green conversion plan has not been defined.
Pb-Free (RoHS): TI's terms "Lead-Free" or "Pb-Free" mean semiconductor products that are compatible with the current RoHS requirements for all 6 substances, including the requirement that lead not exceed 0.1% by weight in homogeneous materials. Where designed to be soldered at high temperatures, TI Pb-Free products are suitable for use in specified lead-free processes.
Pb-Free (RoHS Exempt): This component has a RoHS exemption for either 1) lead-based flip-chip solder bumps used between the die and package, or 2) lead-based die adhesive used between the die and leadframe. The component is otherwise considered Pb-Free (RoHS compatible) as defined above.

Green (RoHS & no Sb/Br): TI defines "Green" to mean Pb-Free (RoHS compatible), and free of Bromine (Br) and Antimony (Sb) based flame retardants (Br or Sb do not exceed 0.1% by weight in homogeneous material)

(3) MSL, Peak Temp. - The Moisture Sensitivity Level rating according to the JEDEC industry standard classifications, and peak solder temperature.

(4) There may be additional marking, which relates to the logo, the lot trace code information, or the environmental category on the device.

(5) Multiple Device Markings will be inside parentheses. Only one Device Marking contained in parentheses and separated by a "~" will appear on a device. If a line is indented then it is a continuation of the previous line and the two combined represent the entire Device Marking for that device.

(6) Lead/Ball Finish - Orderable Devices may have multiple material finish options. Finish options are separated by a vertical ruled line. Lead/Ball Finish values may wrap to two lines if the finish value exceeds the maximum column width.

Important Information and Disclaimer: The information provided on this page represents TI's knowledge and belief as of the date that it is provided. TI bases its knowledge and belief on information provided by third parties, and makes no representation or warranty as to the accuracy of such information. Efforts are underway to better integrate information from third parties. TI has taken and continues to take reasonable steps to provide representative and accurate information but may not have conducted destructive testing or chemical analysis on incoming materials and chemicals. TI and TI suppliers consider certain information to be proprietary, and thus CAS numbers and other limited information may not be available for release.

In no event shall TI's liability arising out of such information exceed the total purchase price of the TI part(s) at issue in this document sold by TI to Customer on an annual basis.

OTHER QUALIFIED VERSIONS OF CD4070B, CD4070B-MIL, CD4077B, CD4077B-MIL :

- Catalog: CD4070B, CD4077B
- Military: CD4070B-MIL, CD4077B-MIL

NOTE: Qualified Version Definitions:

- Catalog - TI's standard catalog product
- Military - QML certified for Military and Defense Applications

TAPE AND REEL INFORMATION

REEL DIMENSIONS

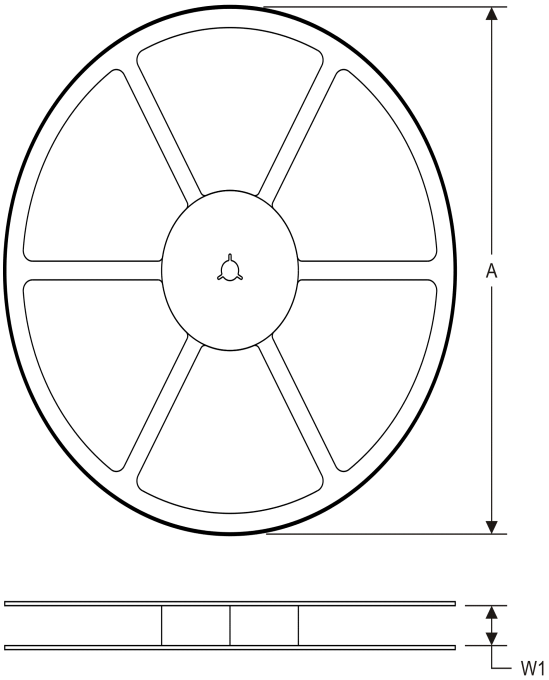

TAPE DIMENSIONS

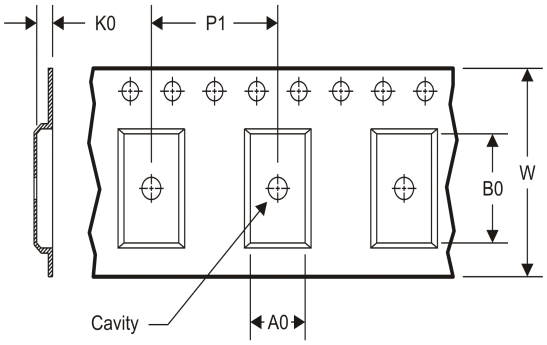

A0	Dimension designed to accommodate the component width
B0	Dimension designed to accommodate the component length
K0	Dimension designed to accommodate the component thickness
W	Overall width of the carrier tape
P1	Pitch between successive cavity centers

TAPE AND REEL INFORMATION

*All dimensions are nominal

Device	Package Type	Package Drawing	Pins	SPQ	Reel Diameter (mm)	Reel Width W1 (mm)	A0 (mm)	B0 (mm)	K0 (mm)	P1 (mm)	W (mm)	Pin1 Quadrant
CD4070BM96	SOIC	D	14	2500	330.0	16.4	6.5	9.0	2.1	8.0	16.0	Q1
CD4070BMT	SOIC	D	14	250	330.0	16.4	6.5	9.0	2.1	8.0	16.0	Q1
CD4070BNSR	SO	NS	14	2000	330.0	16.4	8.2	10.5	2.5	12.0	16.0	Q1
CD4070BPWR	TSSOP	PW	14	2000	330.0	12.4	6.9	5.6	1.6	8.0	12.0	Q1
CD4077BM96	SOIC	D	14	2500	330.0	16.4	6.5	9.0	2.1	8.0	16.0	Q1
CD4077BMT	SOIC	D	14	250	330.0	16.4	6.5	9.0	2.1	8.0	16.0	Q1
CD4077BNSR	SO	NS	14	2000	330.0	16.4	8.2	10.5	2.5	12.0	16.0	Q1

TAPE AND REEL BOX DIMENSIONS

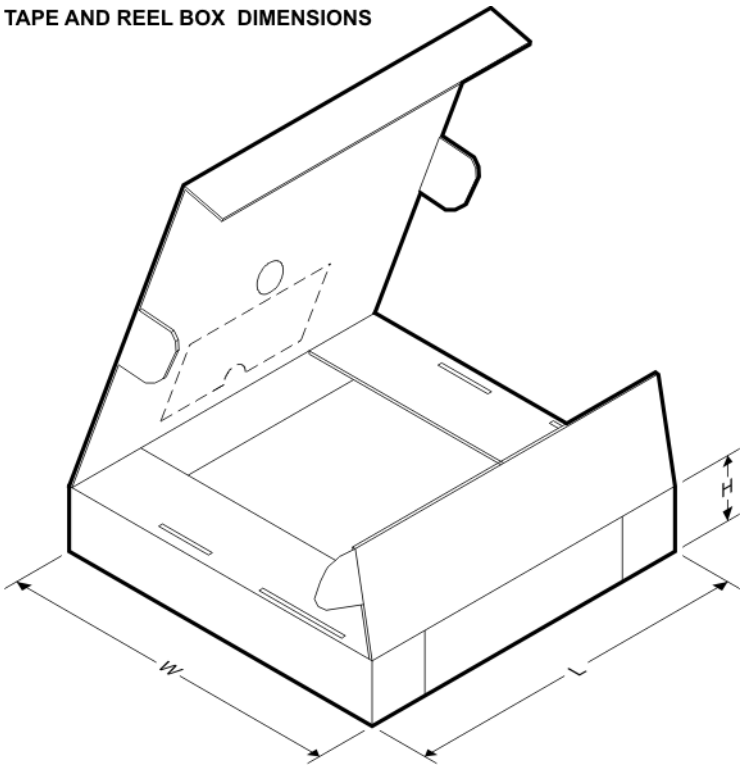

*All dimensions are nominal

Device	Package Type	Package Drawing	Pins	SPQ	Length (mm)	Width (mm)	Height (mm)
CD4070BM96	SOIC	D	14	2500	367.0	367.0	38.0
CD4070BMT	SOIC	D	14	250	367.0	367.0	38.0
CD4070BNSR	SO	NS	14	2000	367.0	367.0	38.0
CD4070BPWR	TSSOP	PW	14	2000	367.0	367.0	35.0
CD4077BM96	SOIC	D	14	2500	367.0	367.0	38.0
CD4077BMT	SOIC	D	14	250	367.0	367.0	38.0
CD4077BNSR	SO	NS	14	2000	367.0	367.0	38.0

J (R–GDIP–T**) CERAMIC DUAL IN–LINE PACKAGE

14 LEADS SHOWN

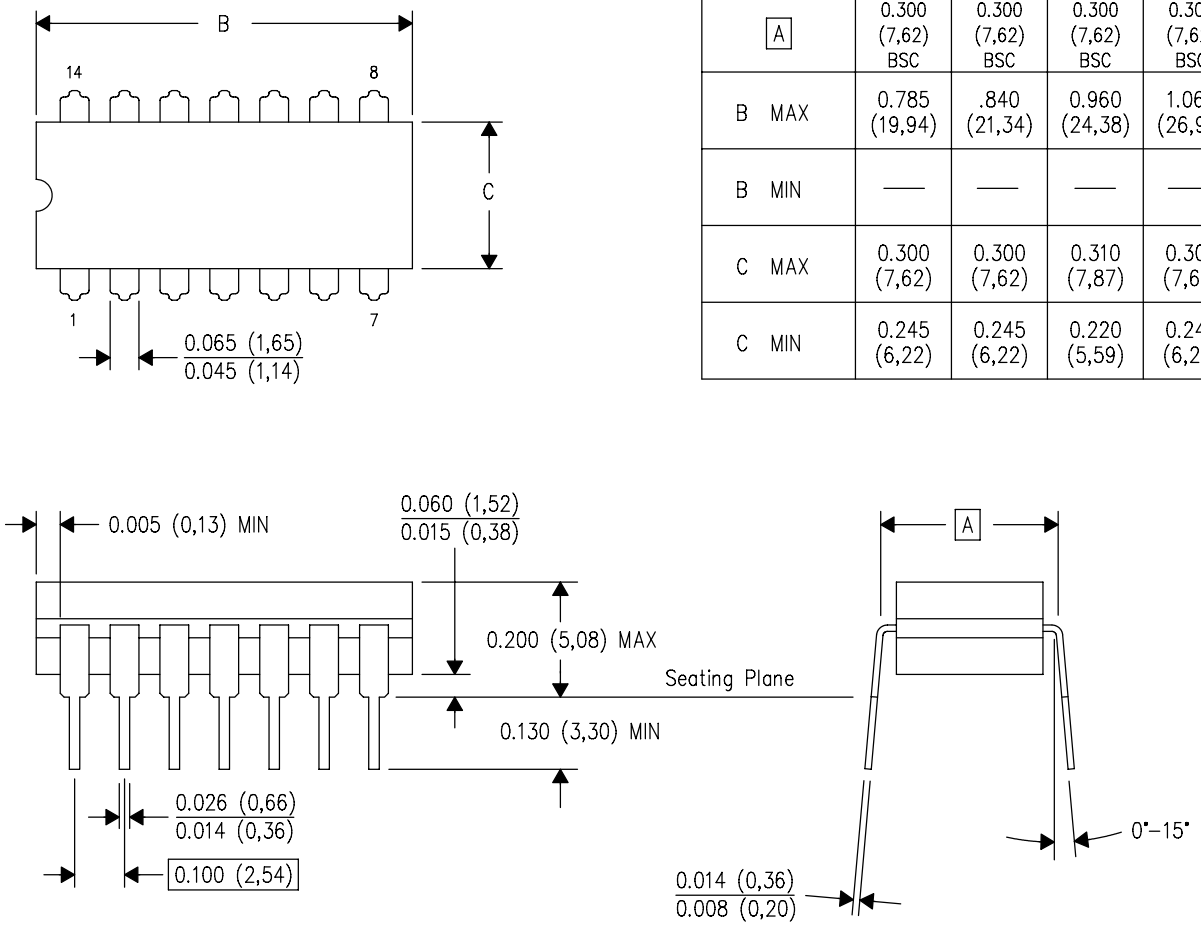

DIM \ PINS **	14	16	18	20
A	0.300 (7,62) BSC	0.300 (7,62) BSC	0.300 (7,62) BSC	0.300 (7,62) BSC
B MAX	0.785 (19,94)	.840 (21,34)	0.960 (24,38)	1.060 (26,92)
B MIN	—	—	—	—
C MAX	0.300 (7,62)	0.300 (7,62)	0.310 (7,87)	0.300 (7,62)
C MIN	0.245 (6,22)	0.245 (6,22)	0.220 (5,59)	0.245 (6,22)

4040083/F 03/03

NOTES:
- A. All linear dimensions are in inches (millimeters).
- B. This drawing is subject to change without notice.
- C. This package is hermetically sealed with a ceramic lid using glass frit.
- D. Index point is provided on cap for terminal identification only on press ceramic glass frit seal only.
- E. Falls within MIL STD 1835 GDIP1–T14, GDIP1–T16, GDIP1–T18 and GDIP1–T20.

D (R–PDSO–G14) PLASTIC SMALL OUTLINE

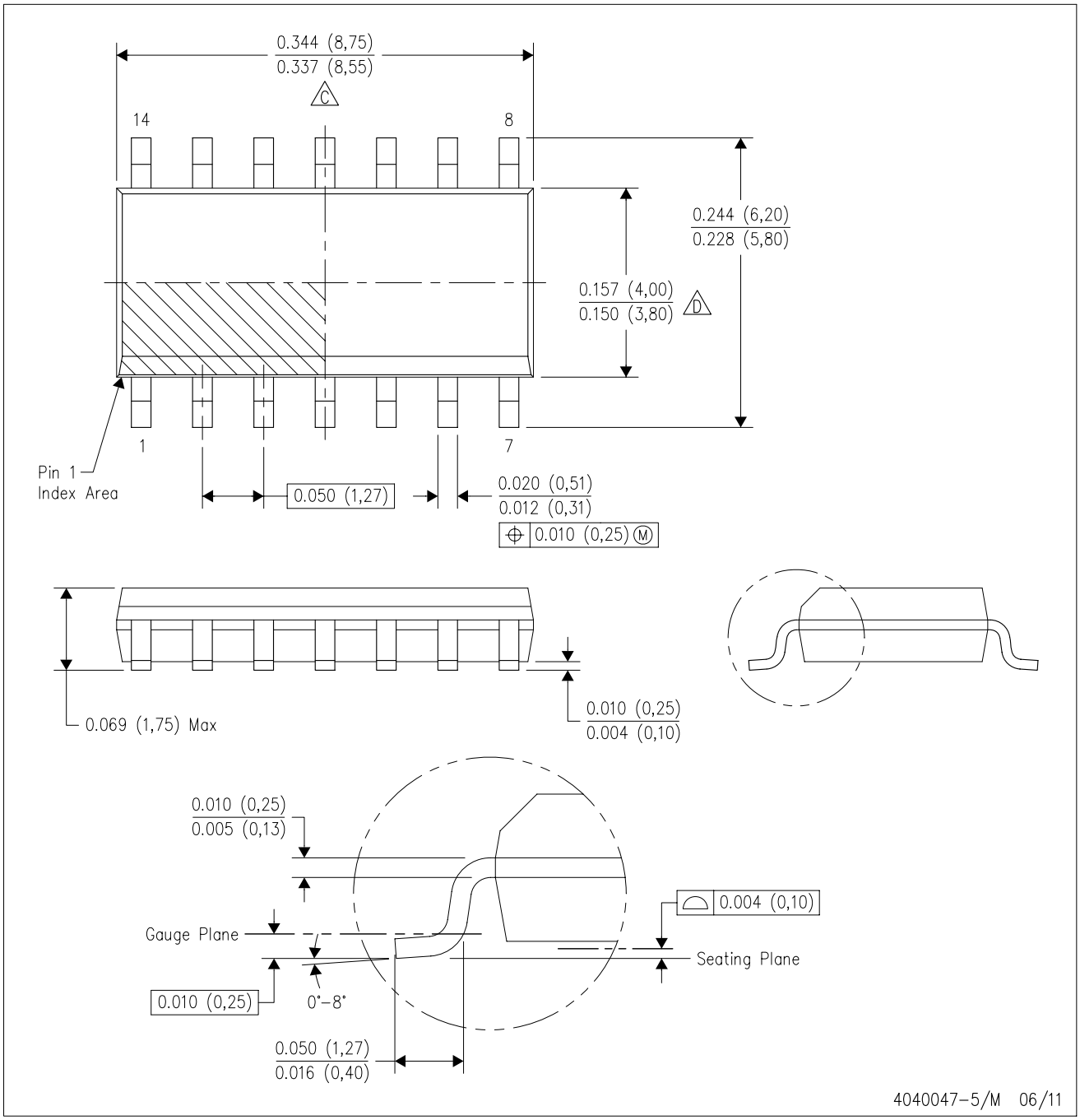

NOTES:
A. All linear dimensions are in inches (millimeters).
B. This drawing is subject to change without notice.
C. Body length does not include mold flash, protrusions, or gate burrs. Mold flash, protrusions, or gate burrs shall not exceed 0.006 (0,15) each side.
D. Body width does not include interlead flash. Interlead flash shall not exceed 0.017 (0,43) each side.
E. Reference JEDEC MS–012 variation AB.

D (R–PDSO–G14) PLASTIC SMALL OUTLINE

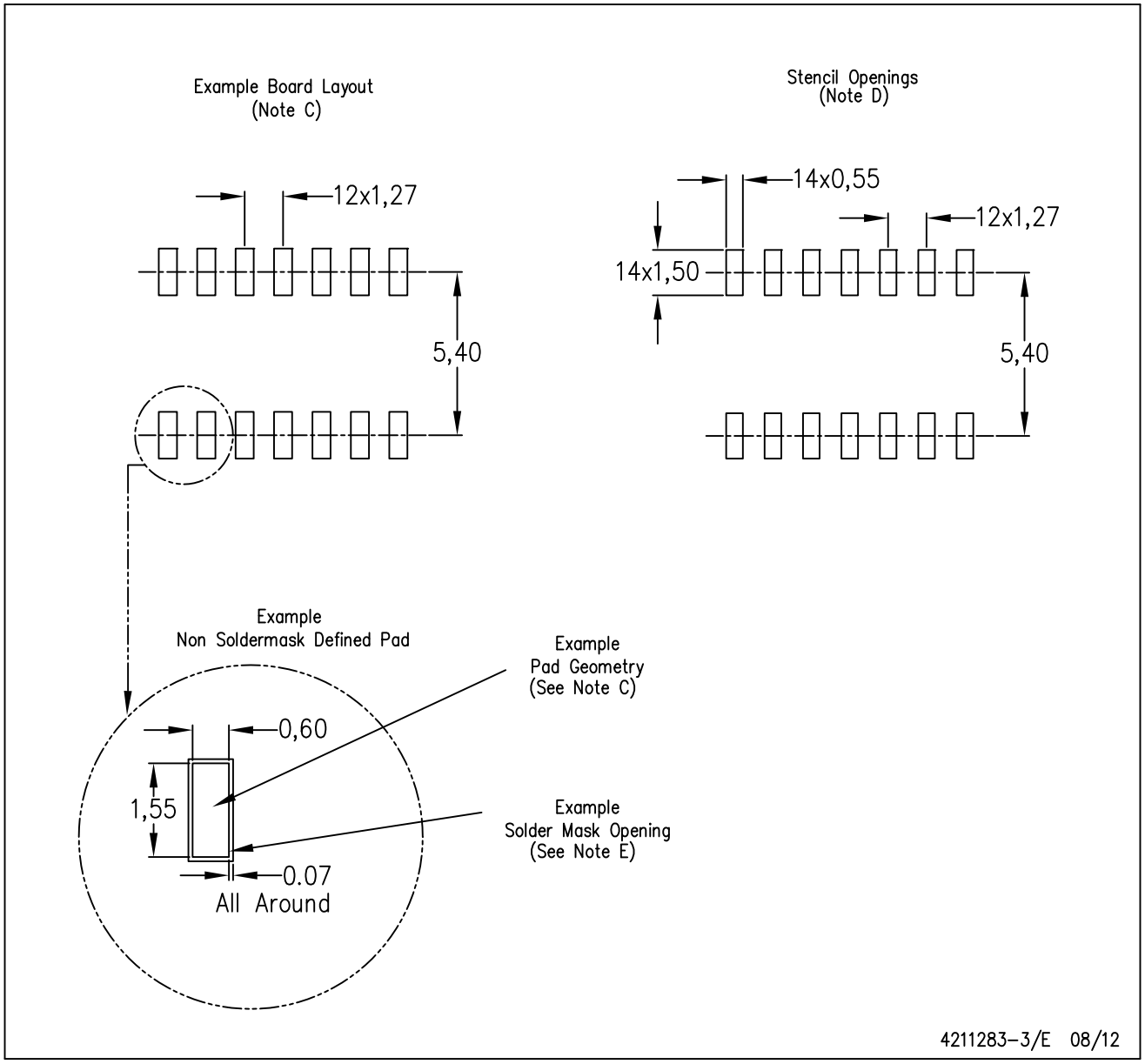

NOTES:
A. All linear dimensions are in millimeters.
B. This drawing is subject to change without notice.
C. Publication IPC–7351 is recommended for alternate designs.
D. Laser cutting apertures with trapezoidal walls and also rounding corners will offer better paste release. Customers should contact their board assembly site for stencil design recommendations. Refer to IPC–7525 for other stencil recommendations.
E. Customers should contact their board fabrication site for solder mask tolerances between and around signal pads.

PW (R–PDSO–G14) PLASTIC SMALL OUTLINE

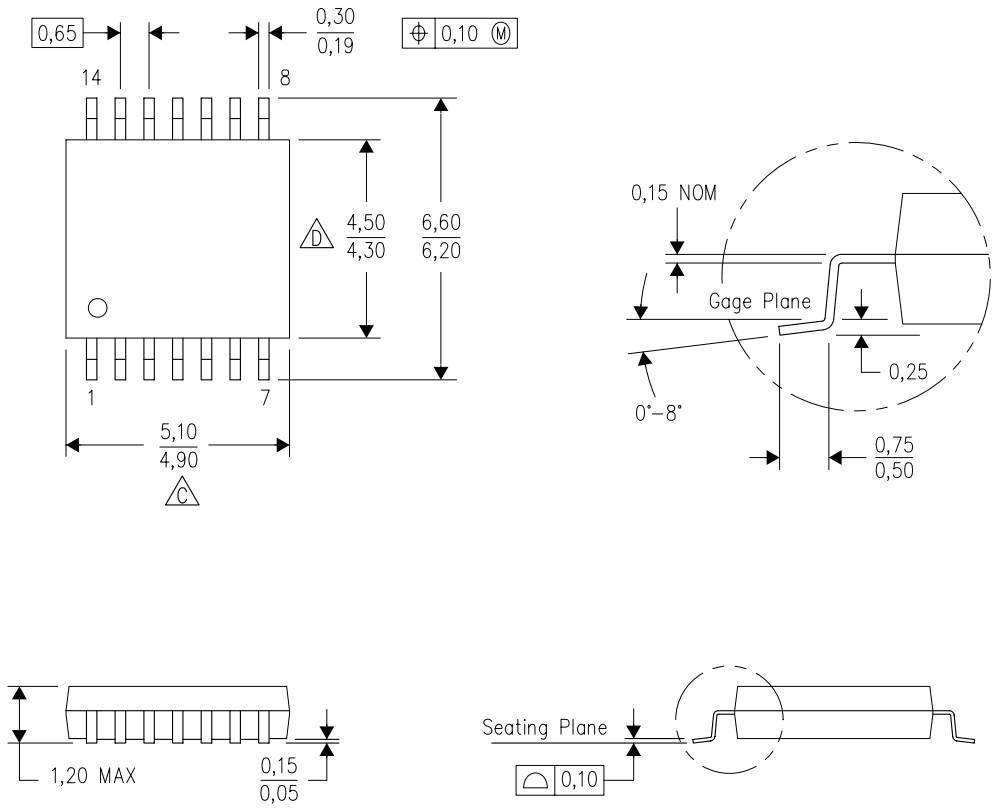

NOTES:
A. All linear dimensions are in millimeters. Dimensioning and tolerancing per ASME Y14.5M–1994.
B. This drawing is subject to change without notice.
C. Body length does not include mold flash, protrusions, or gate burrs. Mold flash, protrusions, or gate burrs shall not exceed 0,15 each side.
D. Body width does not include interlead flash. Interlead flash shall not exceed 0,25 each side.
E. Falls within JEDEC MO–153

PW (R–PDSO–G14) PLASTIC SMALL OUTLINE

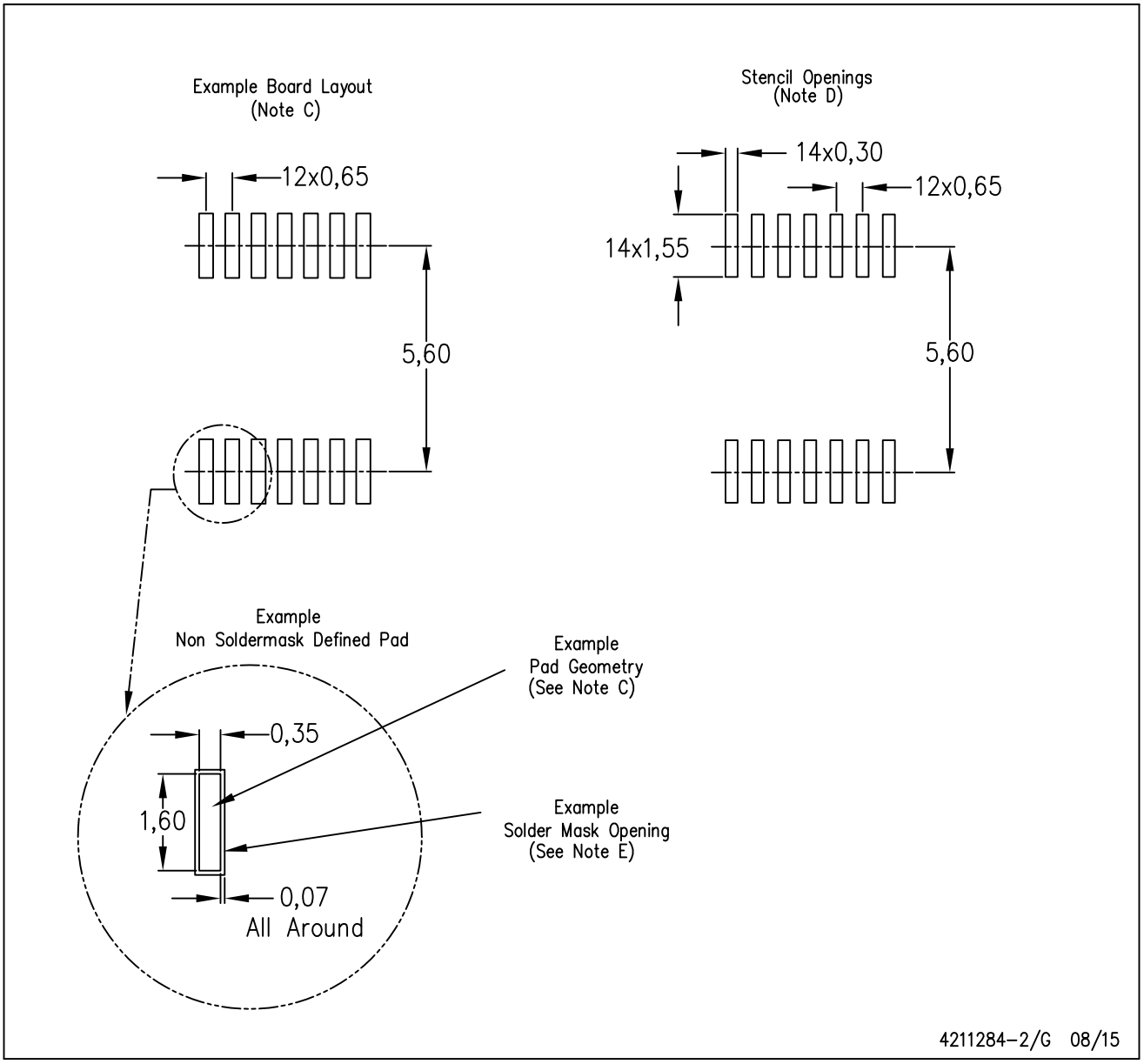

NOTES:
A. All linear dimensions are in millimeters.
B. This drawing is subject to change without notice.
C. Publication IPC–7351 is recommended for alternate designs.
D. Laser cutting apertures with trapezoidal walls and also rounding corners will offer better paste release. Customers should contact their board assembly site for stencil design recommendations. Refer to IPC–7525 for other stencil recommendations.
E. Customers should contact their board fabrication site for solder mask tolerances between and around signal pads.

N (R–PDIP–T**) PLASTIC DUAL–IN–LINE PACKAGE

16 PINS SHOWN

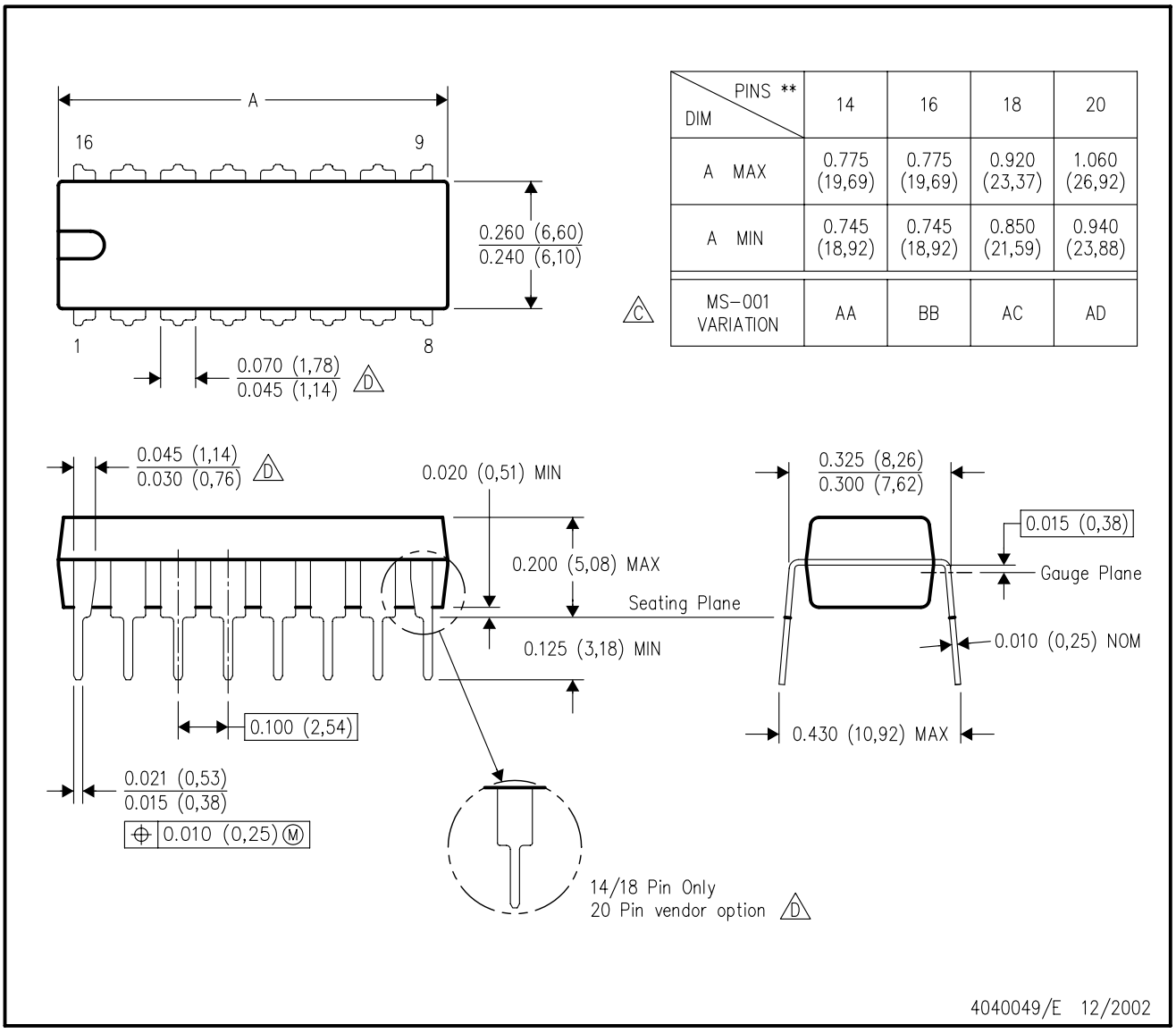

DIM \ PINS **	14	16	18	20
A MAX	0.775 (19,69)	0.775 (19,69)	0.920 (23,37)	1.060 (26,92)
A MIN	0.745 (18,92)	0.745 (18,92)	0.850 (21,59)	0.940 (23,88)
MS–001 VARIATION (C)	AA	BB	AC	AD

NOTES:
A. All linear dimensions are in inches (millimeters).
B. This drawing is subject to change without notice.
C. Falls within JEDEC MS–001, except 18 and 20 pin minimum body length (Dim A).
D. The 20 pin end lead shoulder width is a vendor option, either half or full width.

MECHANICAL DATA

NS (R-PDSO-G)** **PLASTIC SMALL-OUTLINE PACKAGE**

14-PINS SHOWN

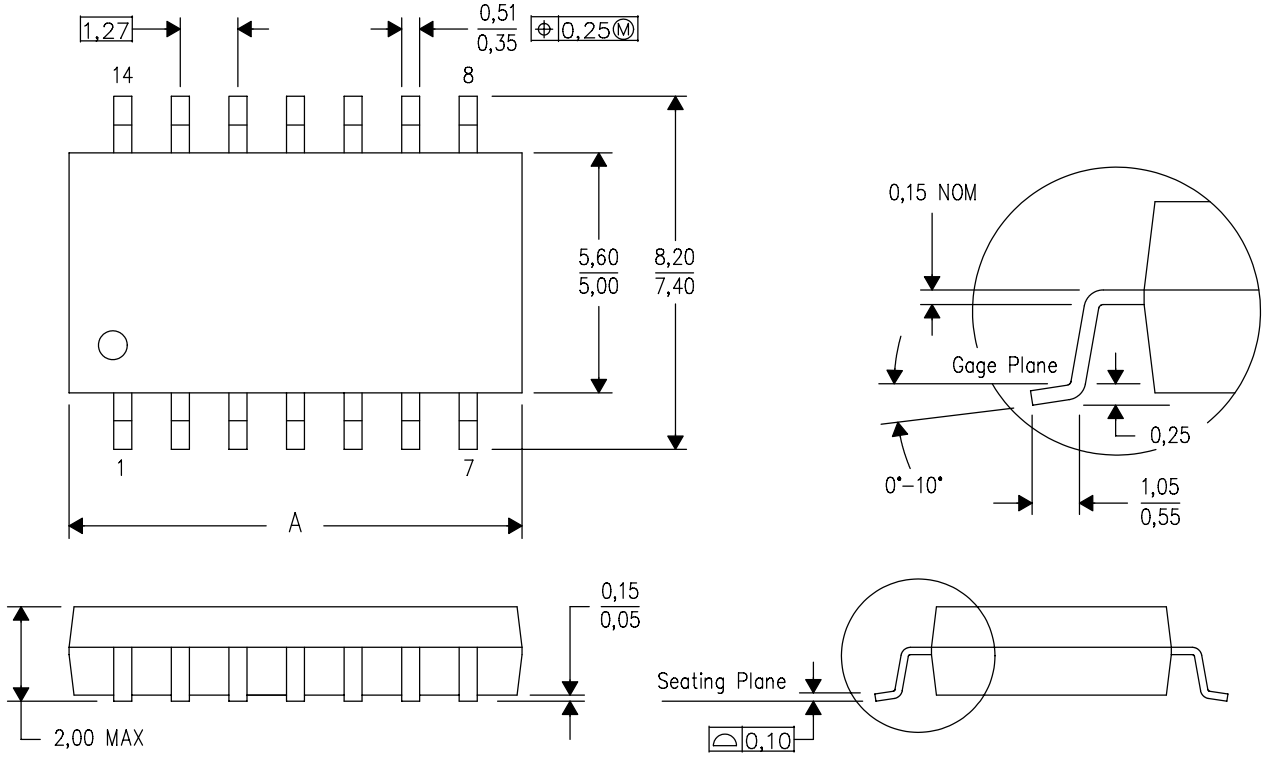

DIM \ PINS **	14	16	20	24
A MAX	10,50	10,50	12,90	15,30
A MIN	9,90	9,90	12,30	14,70

4040062/C 03/03

NOTES:
A. All linear dimensions are in millimeters.
B. This drawing is subject to change without notice.
C. Body dimensions do not include mold flash or protrusion, not to exceed 0,15.